HOW DER

DATE	2009/10/20

SPECIFICATIONS

① Housing Material: PBT (UL94V-0).Black
② Screw: M3.5 Nickel Plated Steel
③ Terminals: Tin Plated Brass
④ Cover: PC Transparent

Screws Torque: 10.5 In-Lb
Wire Range: 12~18 AWG
Rated: 20 Amperes.AC300V
Operation Temperature: -40°C~+130°C
Insulation withstands volt: AC2000V min
Insulation resistance: >1000MΩ or more at DC500V

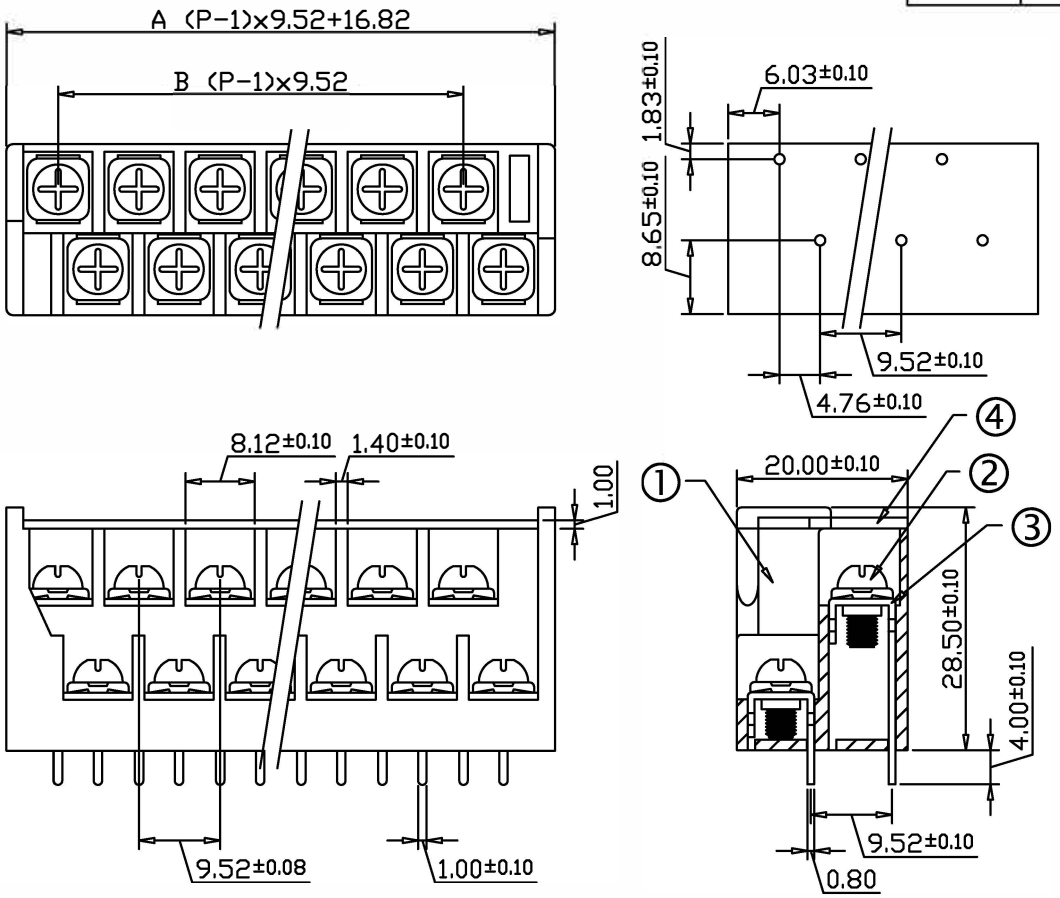

Part Number:

HD-941-□P-C

Pole Size 2~24P

Tolerance ± 0.5

POLE	2	3	4	5	6	7	8	9	10	11	12	13	14	15
A	26.34	35.83	45.38	54.9	64.42	73.94	83.46	92.98	102.5	112.02	121.54	131.06	140.58	150.1
B	9.52	19.04	28.56	38.08	47.6	57.12	66.64	76.16	85.68	95.2	104.72	114.24	123.76	133.28

POLE	16	17	18	19	20	21	22	23	24
A	159.62	169.14	178.66	188.18	197.7	207.22	216.74	226.26	235.78
B	142.8	152.32	161.84	171.36	180.88	190.4	199.92	209.44	218.96

文件發行
2024.04.24
JULIA

ROHS

CO/Name	HOW DER ELECTRONIC CO.,LTD	REV.	CONTENT	DATE	NO.	PART NO.	DrawingNo		DATE		DrawingNo	HD-94195202
P/Name	Dual Level PCB type terminal block				① ② ③ ④		APPROVED		DATE		Scale	2:1(:)
							CHECK		DATE		Sheet	1/1
											Unit	mm

http://www.howder-tw.com Tel:02-2223-1026
E-mail:howder.tb@msa.hinet.net Fax:02-2221-6471