HOW DER

SPECIFICATIONS

① Housing Material: Polyamide 66(UL94V-0), Black
② Screw: M3.0 Nickel Plated Steel
③ Terminals: Tin Plated Brass
④ Cover: PC Transparent

Screws Torque: 12 In-Lb
Wire Range: 16~22 AWG
Rated: 15 Amperes.AC300V
Operation Temperature: -55°C~+105°C
Insulation withstands volt: AC2000V min
Insulation resistance: >1000MΩ or more at DC500V

Part Number:

FTB-702-□P-□

C:With Cover

Pole Size 2~32P

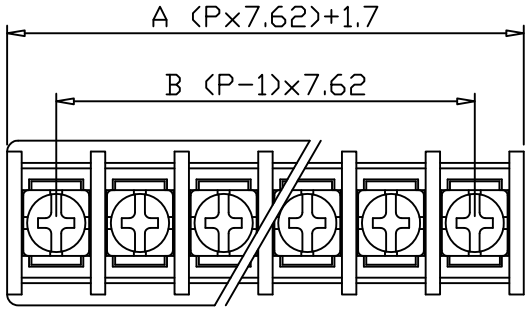

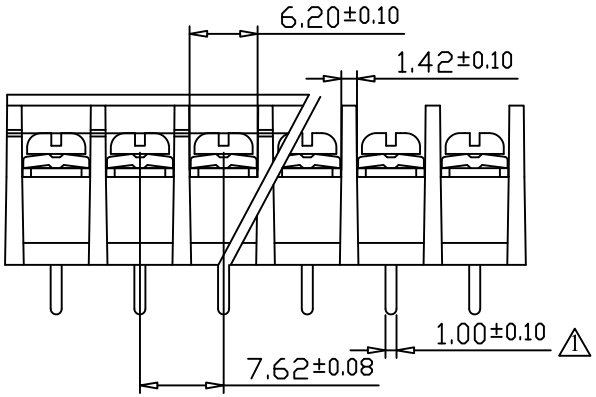

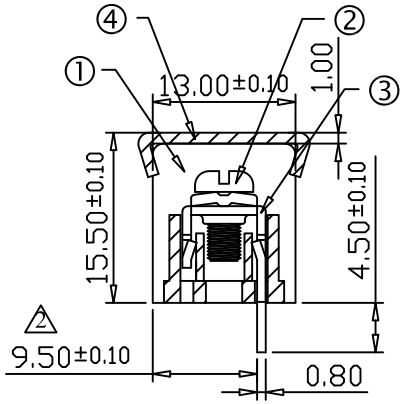

POLE	2	3	4	5	6	7	8	9	10	11	12	13	14	15
A	16.94	24.56	32.18	39.8	47.42	55.04	62.66	70.28	77.9	85.52	93.14	100.76	108.38	116
B	7.62	15.24	22.86	30.48	38.1	45.72	53.34	60.96	68.58	76.2	83.82	91.44	99.06	106.68

POLE	16	17	18	19	20	21	22	23	24	25	26	27	28	29	30	31	32
A	123.62	131.14	138.86	146.48	154.1	161.72	169.34	176.96	184.58	192.2	199.82	207.44	215.06	222.68	230.3	237.92	245.54
B	114.3	121.92	129.54	137.16	144.78	152.4	160.02	167.64	175.26	182.88	190.5	198.12	205.74	213.36	220.98	228.6	236.22

文件發行
2018.11.21
黃琦婷

ROHS

CO/Name	HOW DER ELECTRONIC CO.,LTD	REV.	CONTENT	DATE	POLES	A	B	Drawing		DATE	20160306	DrawingNo	FTB-7076204
		1	尺寸修改1.1修改1.0	2017 0715	02P~06P	±0.30	±0.20						
P/Name	Barrier type terminal block	2	尺寸修改9.55修改9.5	2017 0715	07P~12P	±0.35	±0.25	APPROVED		DATE		Scale	2:1(:)
					13P~18P	±0.40	±0.30					Sheet	1/1
http://www.howder-tw.com	Tel:02-2223-1026				19P~24P	±0.45	±0.35	CHECK		DATE		Unit	mm
E-mail:info@howder-tw.com	Fax:02-2221-6471				25P~30P	±0.50	±0.40						